PRO LED
PRO LED SIGN TECHNOLOGY INC.
TORONTO, CANADA

PRODUCT DATA SHEET
2026
www.ledsign4life.ca

SKU 95P-W-5mm

9' by 5' (113" (L) x 63" (H)) Full Color Premium Duty Outdoor LED Sign

Single Sided · Outdoor · MET Canada Certified · IP67 · 5 mm

This premium-duty Full Color Outdoor LED Sign is MET Canada certified, providing exceptional quality and performance in all weather conditions. Backed by a standard five-year warranty. 5 mm pixel pitch for sharper close- and mid-range outdoor viewing.

Its 113" L x 63" H dimensions and premium-duty construction make it ideal for commercial and industrial sites in challenging Canadian weather.

5 mm	≥6,500	IP67	5 yr
Pixel Pitch	NITS	Weather	Warranty

Technical Specifications — 5 mm

Base SKU	95P-W	Color Depth	16 bit
Datasheet ID	95P-W-5mm	Contrast Ratio	3,000 : 1
Product Size	113" L x 63" H	Brightness	≥6,500 NITS
Pixels	320 (L) × 574 (H) pixels	Brightness Control	256 levels
Display Size	same as above	Viewing Angle	160°(H) / 120°(V)
Pixel Pitch	5 mm	Ideal Viewing Range	14' or greater
LED Package	SMD	Power (Max / Avg)	2750W / 1450W
Pixels / Sq. Ft	3,717	Input Voltage	110VAC
Module Dimensions	12.6”x12.6”	Ingress Protection	IP67
Module Matrix	64 × 64	Operating Temp	-40 °C - +60 °C
Driving Method	1/8 constant current	Cabinet Material	Aluminum
Refresh Rate	≥3,840 Hz	Cabinet Weight	300 LB
Video Frame Rate	60 frames/second	LED Lifespan	100,000 hours
Grayscale	65,536/(281 trillion colors)	MTBF	>5,000 hours

Key Features

- MET Canada Certificate
- 5 mm pixel pitch option
- Full-color video (MP4 & more)
- IP67 weather protection
- ≥6,500 NITS daylight bright
- Mounting & installation guide included

PRO-LEDSIGN TECHNOLOGY INC.
438 Gibraltar Dr, Unit 13B, Mississauga, ON L5T 2P2
Tel (+1) 647-478-8343 · info@proledsigntech.com · ray@proledsigntech.com

ledsign4life.ca
Ships across Canada

OUTDOOR LED SIGNS DIGITAL BILLBOARDS

PREMIUM DUTY SIGNS INSTALLATION GUIDE

-Ver. Mar. 2020

CONTENTS

01 FCC INTERFERENCE STATEMENT

02 STEPS

03 UNPACKING

04 OVERVIEW

05 STRUCTURAL & LIFTING

06 MOUNTING

07 VENTILATION

08 ELECTRICAL INSTALLATION

09 ETL CERTIFICATE

FCC INTERFERENCE STATEMENT

Federal Communications Commission Interference Statement

This device complies with part 15 of the FCC Rules. Operation is subject to the following two conditions: (1) This device may not cause harmful interference, and (2) this device must accept any interference received, including interference that may cause undesired operation.

This equipment has been tested and found to comply with the limits for a Class B digital device, pursuant to part 15 of the FCC Rules. These limits are designed to provide reasonable protection against harmful interference in a residential installation. This equipment generates, uses and can radiate radio frequency energy and, if not installed and used in accordance with the instructions, may cause harmful interference to radio communications. However, there is no guarantee that interference will not occur in a particular installation. If this equipment does cause harmful interference to radio or television reception, which can be determined by turning the equipment off and on, the user is encouraged to try to correct the interference by one or more of the following measures:

• Reorient or relocate the receiving antenna.
• Increase the separation between the equipment and receiver.
• Connect the equipment into an outlet on a circuit different from that to which the receiver is connected.

FCC Caution: Any changes or modifications not expressly approved by the party responsible for compliance could void the user's authority to operate this equipment.

STEPS

Test before mounting is suggested:
Power on the screen and make sure it's working properly.

UNPACKING MOUNTING ELECTRICAL INSTALLATION

PAGE 03: Packing types.
PAGE 03: Checklist.

PAGE 05: Follow proper structural & lifting instruction.
PAGE 06: Follow mounting requirements.
PAGE 07: Ensure proper ventilation. (Improper ventilation will dramatically reduce the life of led display, and may VOID the manufacturer's warranty.)

PAGE 08: Install conduit where needed - Must use water tight conduit for all electrical connections.

PAGE 08: Refer to voltage & amperage requirements for the led display as identified on cabinet label.

OVERVIEW

EXTERNAL PARTS POSITION

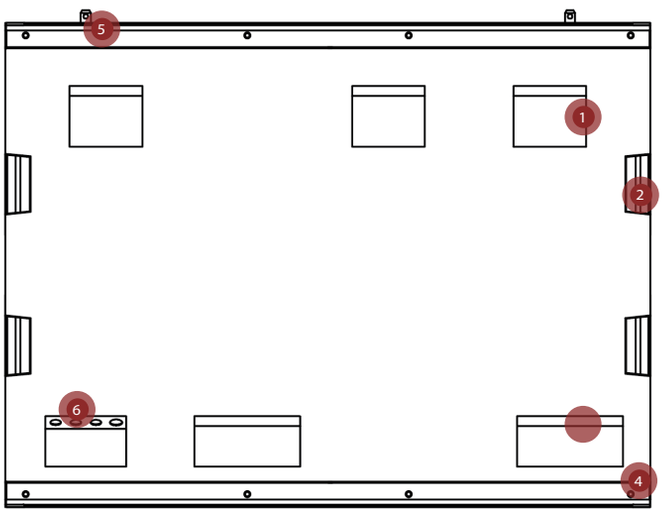

1. Exhaust
2. Handle
3. Intake
4. Angle bracket
5. Lifting eyes (Alignment pins)
6. Power entry,antenna & sensors exit (if applicable)

INTERNAL COMPONENTS POSITION

1. Receiving cards layer
2. Power supplies layer
3. Wiring layer:
   Power entry; Inner wiring between cabinets, antenna & sensors exit (if applicable)

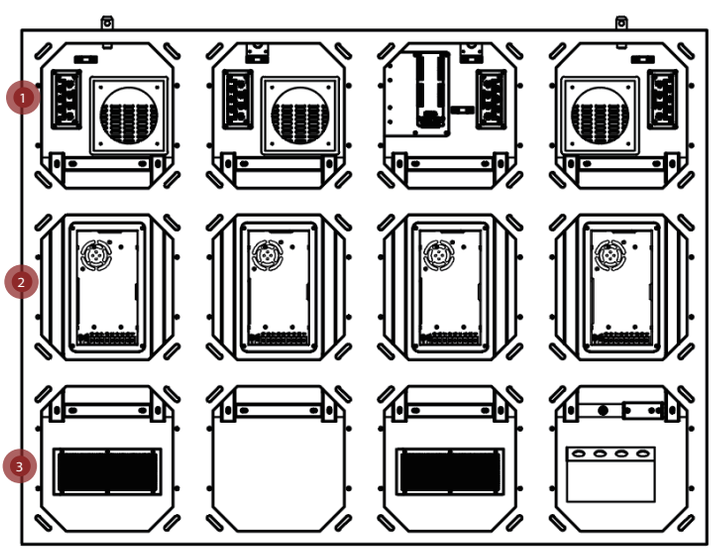

STRUCTURAL & LIFTING

It is the installer's responsibility to provide an adequate support structure for the led display. It is very important that you check with local building and planning department for codes and laws regarding led display installation.

IMPORTANT

- DO NOT weld any part of the led display cabinet.
- DO NOT drill hole into the led display cabinet.
- MUST provide adequate clearance for proper ventilation.

Angle Bracket

This bracket is universally used for pole mount, wall mount, base mount, and other structural installations. Both the top and bottom must be used to ensure structural stability.

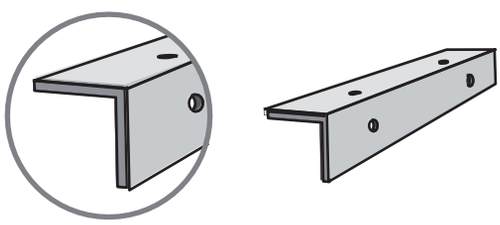

Lifting Only From The Lifting Eyes

Use care when lifting the display using all the provided lifting points. Use only approved lifting straps which meet the appropriate load requirements. (Not included)

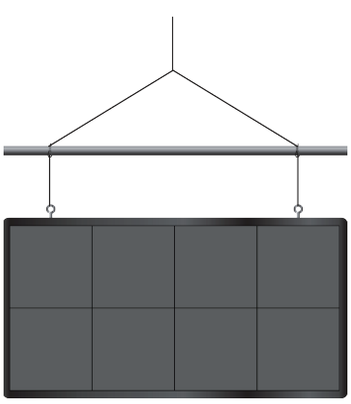

With a Spreader Bar

* Use the extra angle bar as Spreader Bar

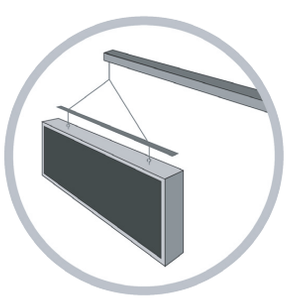

IMPORTANT
Do not use this method if this angle is less than 45°

MOUNTING

The information below is for general reference only. It does not replace professionally engineered drawings. Please consult your specific shop drawing for details.
We provide angle brackets for free. There are 4 pieces angle brackets for each led display cabinet (2 brackets are assembled on top and bottom of cabinet's rear side; other 2 brackets are packed separately in crates.)

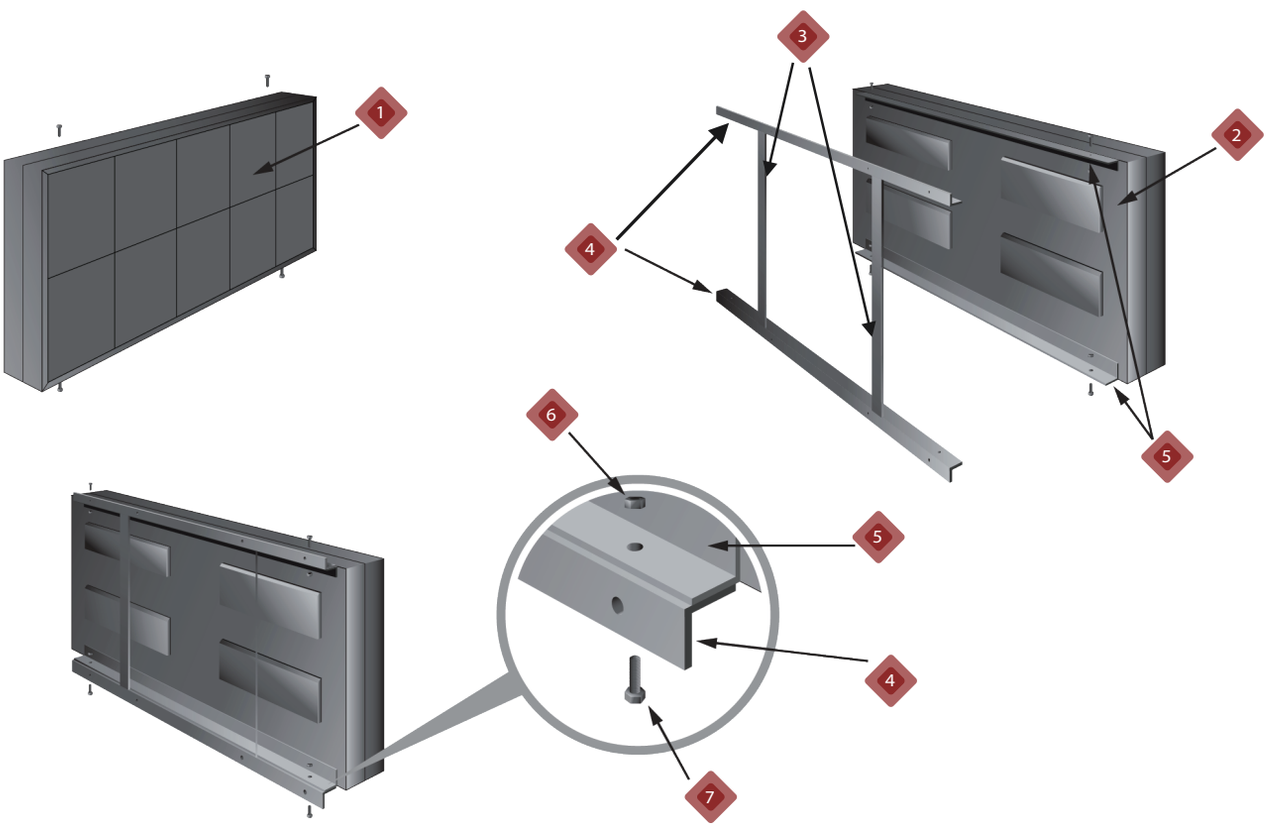

1.Front 2.Back 3.Reinforced frame (build as needed)

4.Brackets for fixing to structure **(not included)**

5.Brackets on cabinet (*DO NOT WELD THIS BRACKET)

6.Nuts

7.Bolts

VENTILATION

Our led displays are designed to operate between -40°F and 140°F.
There are multiple intake vents and exhaust vents on back of each cabinet. The cabinets include internal thermostats to turn the fans ON once it reaches 100°F. In order to keep the led display at nominal temperature, adequate ventilation is required.

IMPORTANT

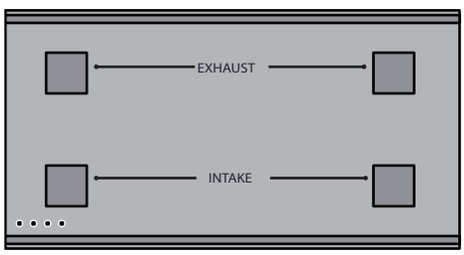

1.Improper ventilation will dramatically reduce the life of led display, and may VOID the manufacturer's warranty.
2.DO NOT restrict air flow around the back of the cabinets.
3.Anti-vandalism cover is NOT suggested. Make sure of adequate ventilation when apply anti-vandalism cover to display side.

Recessed installation

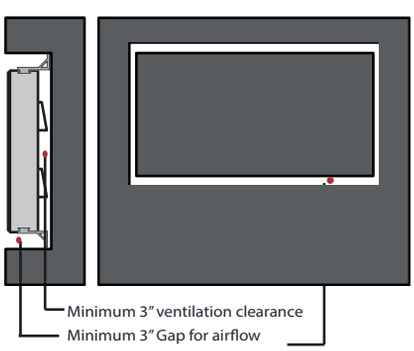

When installing into a recessed structure, you must provide minimum of 3" ventilation clearances to allow cool air to be circulated.

Shroud installation

1.When installing shrouds, we recommend using perforated aluminum for better appearance (not required).
2.DO NOT use non-perforated sheets to cover the sides of the led display. This will obstruct the air flow, which can damage the electronic components.

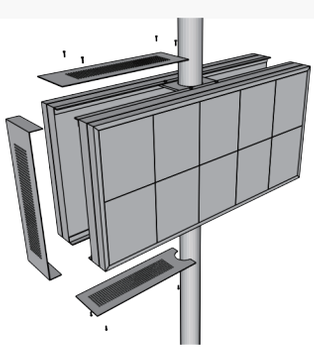

ELECTRICAL INSTALLATION

• Main electrical connections should be done by a licensed electrician following all N.E.C. and Local codes.
• A proper Earth Ground must be run from the led display, to a grounding rod using N.E.C. standards.

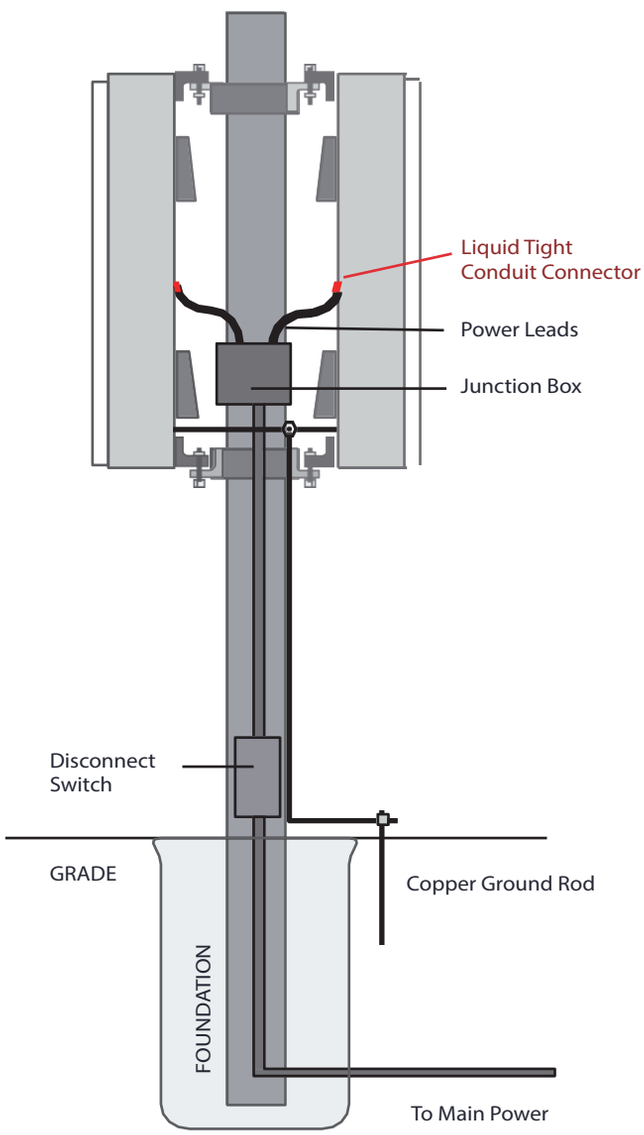

IMPORTANT

Liquid tight connector (supplied) MUST be used for inner wiring.

Liquid tight conduit (supplied) MUST be used for power entry and antenna & sensors exit.

Each cabinet has a power entry point.
One power entry may be used for multi cabinets by inner wiring (with aviation plugs).

• Check the wiring diagram supplied.
• Check the cabinet label for specific power requirements.

Earth Ground:
All LED display must be earth grounded to minimize static currents and lightning damage. The structure or foundation will not provide a sufficient earth ground for the led display. A properly installed copper ground rod must be used.

ETL Certified

Model Code: SPE-1000

IMPROVEMENT

Please email your feedback to info@proledsigntech.com
Your feedback is highly appreciated and is extremely helpful for us to make the improvements. Thank you!